WIRING DIAGRAM

CMF3 Furnace Series **120 Volt** **Single Phase / 60 Hz**

NOTES:

1. Incoming power must be polarized. Observe color coding. (See furnace data label for electrical information.)
2. If any of the original wires (as supplied with the appliance) must be replaced, use 105˚C Thermoplastic type wire or its equivalent.
3. Use copper conductors only.

CMF3 Furnace

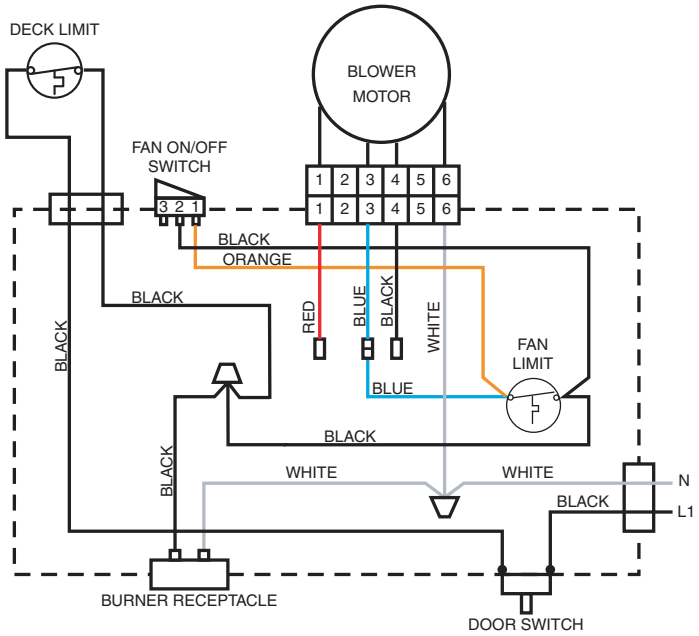

Blower speed Setting Shown is the High Speed (see table)

Blower Wire Color	Blower Speed
Red	Low
Blue	Med.
Black	High

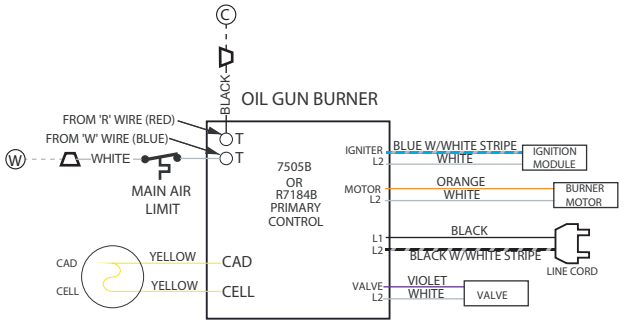

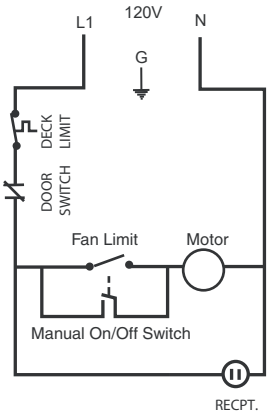

LEGEND:

FIELD WIRING	- - - -
LOW VOLTAGE	———
HIGH VOLTAGE	▬▬▬

10286200
09/19