WIRING DIAGRAM

H3HK008H-01C **240VAC** **8 KW, 10 KW, 1-Circuit, 1-Phase Electric Heater Kit**
H3HK010H-01C

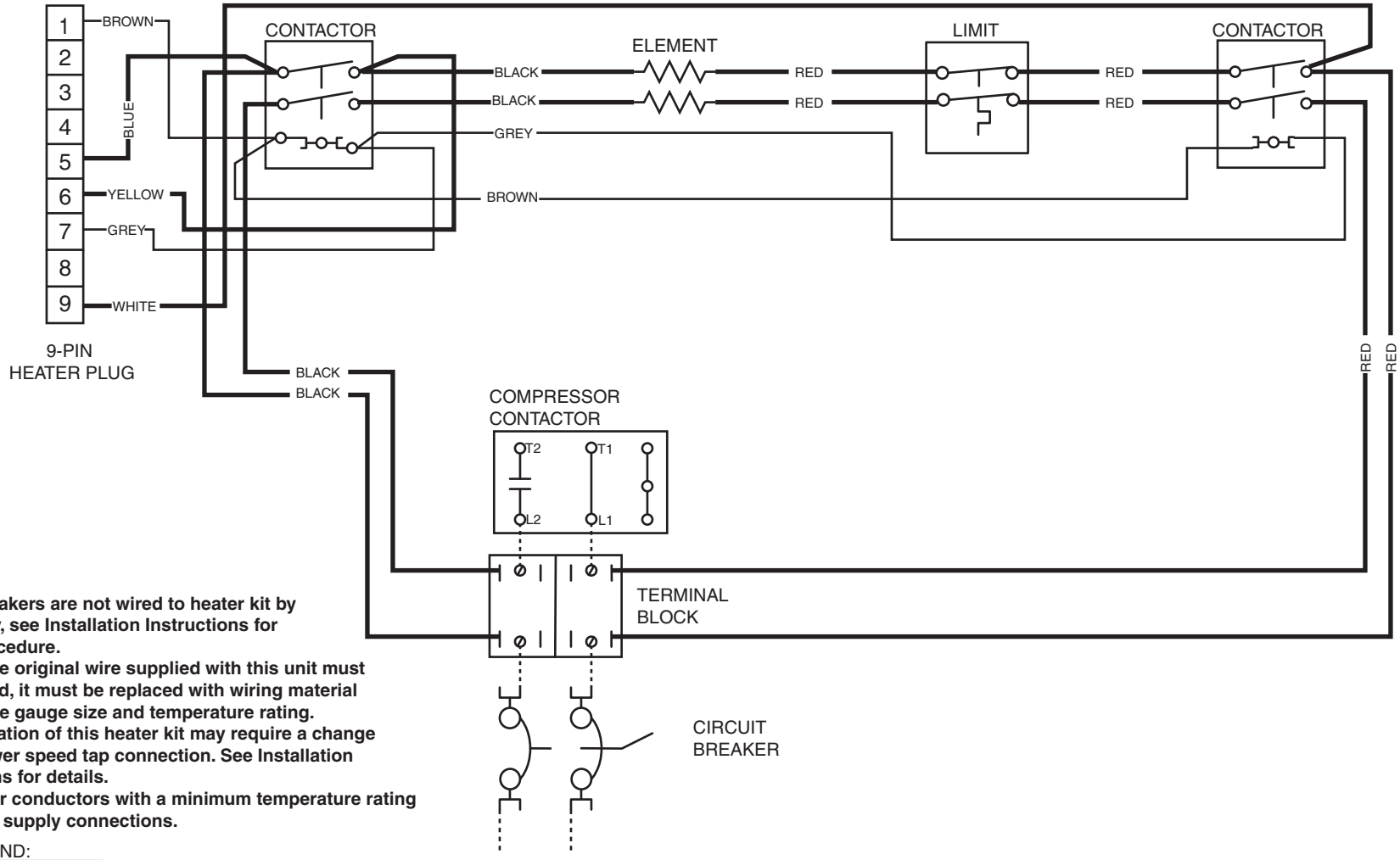

NOTES:

1. **Circuit breakers are not wired to heater kit by the factory, see Installation Instructions for wiring procedure.**
2. **If any of the original wire supplied with this unit must be replaced, it must be replaced with wiring material of the same gauge size and temperature rating. The installation of this heater kit may require a change in the blower speed tap connection. See Installation Instructions for details.**
3. **Use copper conductors with a minimum temperature rating of 60 C for supply connections.**

LEGEND:

FIELD WIRING	- - - -
LOW VOLTAGE	———
HIGH VOLTAGE	━━━

711442B
(Replaces 711442A)
08/15