WIRING DIAGRAM

H3HK015H-01C
H3HK015H-21C

240VAC

15 kW, 3-Circuit, 1-Phase Electric Heater Kit

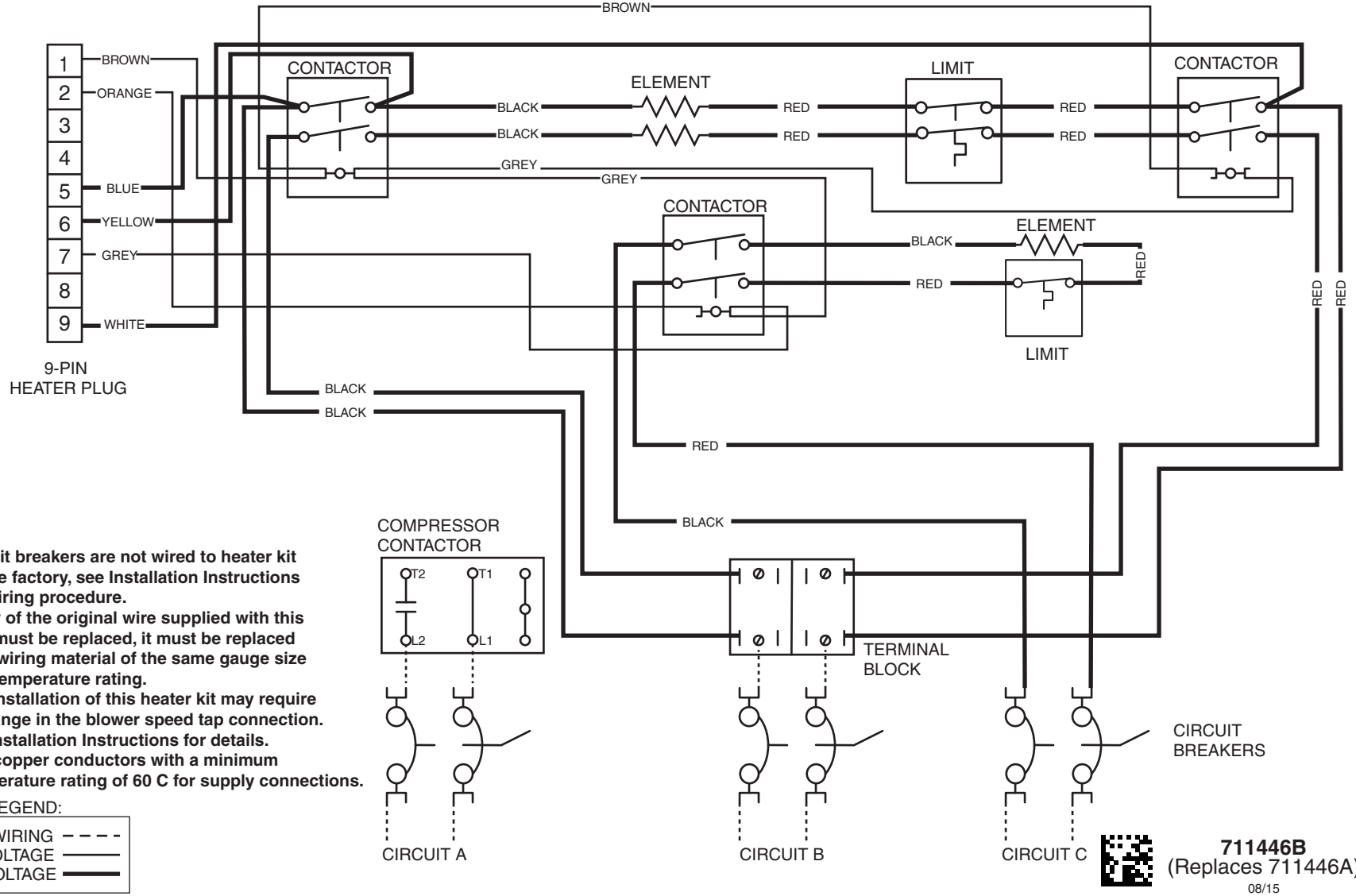

NOTES:

1. **Circuit breakers are not wired to heater kit by the factory, see Installation Instructions for wiring procedure.**
2. **If any of the original wire supplied with this unit must be replaced, it must be replaced with wiring material of the same gauge size and temperature rating.**
   The installation of this heater kit may require a change in the blower speed tap connection. See Installation Instructions for details.
3. **Use copper conductors with a minimum temperature rating of 60 C for supply connections.**

LEGEND:

FIELD WIRING	- - - -
LOW VOLTAGE	———
HIGH VOLTAGE	▬▬▬

711446B
(Replaces 711446A)
08/15